On the Road Again



EAE Learning objectives for this lesson

You will learn vocabulary and expressions about hiring and driving a car. You will practice dialogues about car hire. You will practice your oral comprehension and test it.

Activity One: Ask and answer the questions with your partner.

1. Can you **drive** a car?
2. Do you have your own car?
3. Do you drive often?
4. Have you driven **in another country**?
5. Have you ever **hired** a car?

Activity Two: At home **label the parts of the car.**
Now, in teams see who can draw and label a diagram of a car with the same parts labelled, most quickly and accurately. The race is on!

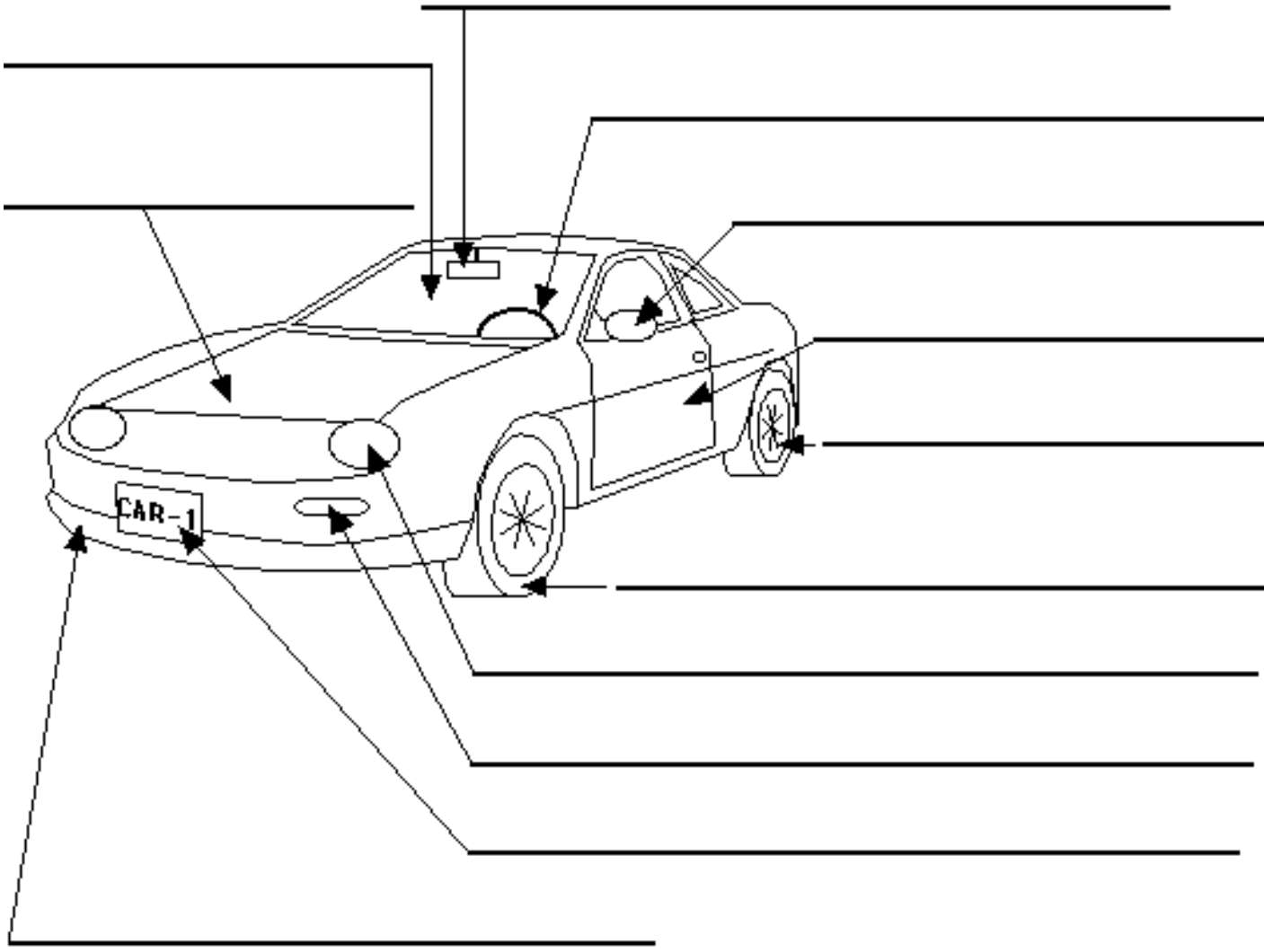

Activity Three: Dialogue with a different partner practice the dialogue

Car hire

- Customer - Hello, I'd like to hire a car
- Car hire assistant - how long for?
- Customer For a week, how much does it cost?
- Car hire assistant £40 a day with unlimited mileage for a small car, what type of car do you want — manual or automatic, an SUV, a hatchback, a family car?
- Customer - Just a small one please, but has this car got air conditioning and a a sat nav?
- Car hire assistant - Yes it has all that. I see you are raveling with children, do you need car seats?
- Customer No thanks we have our own car seats.
- Car hire assistant - could I see your driving licence?
- Customer Of course
- Car hire assistant - OK, please sign here, you have to bring it back with a full tank,it has to be returned by 2pm on Saturday.
- Customer Ok does it take petrol or diesel and is it manual or automatic?
- Car hire assistant - Don't worry I'll show you the controls
- Customer Great thanks, can I just ask how do you open the petrol tank?
- Car hire assistant - OK well call us if you have any problems.
- Customer Thanks a lot.
- Car hire assistant - Have a great holiday.
- Customer Bye.

Activity Four: Now change the dialogue for these ***different*** **situations**:

1. The customer is a young man who wants to impress his girlfriend with a sports car.
2. The lowest price offered by the car hire assistant is too expensive for the customer.
3. There are no cars available, only camping cars.
4. When the car hire assistant shows the car to the customer, there are scratches all over it and the car radio is broken.

Activity Five: Listen to the Willie Nelson song and ***fill the gaps in the lyrics***:

On the road again
Just can't ……. to get on the road again
The life I love is ……. music with my friends
And I can't ……. to get on the road again
On the road again
Going places that I've ……. been
Seeing things that I may ……. see again
And I can't ……. to get on the road again
On the road again
Like a band of gypsies we go down the …….
We're the best of friends
Insisting that the ……. keep turning our way
And our …….
Is on the road again

Just can't ……. to get on the road again
The life I love is ……. music with my friends
And I can't ……. to get on the road again
On the road again
Like a band of gypsies we go down the …….
We're the best of friends
Insisting that the world keep ……. our way
And our way
Is on the road again
Just can't wait to get on the ……. again
The life I love is ……. music with my …….
And I can't wait to get on the road …….
And I ……. wait to get on the road again

Activity Six: Write a list with your partner.



You are going on a l**ong road trip from one side of the United States to another.** You will travel in a VW Camping car all the way across the states. What will you need to take with you. Write a list. Feel free to use the dictionary. Let's see what different ideas you have and compare lists.



Activity Seven: Watch the video - but first read the resumé.

9 Tips for Car Rentals https://www.youtube.com/watch?v=In8H6gKWh9c

Let's Go Road Trippin

Resumé - Let's read the resumé before you watch the video. You will try to finish the sentences in the resumé. Your main objective is to understand in general.

A. Make sure you have unlimited miles so that..
B. Only pay for the insurance as an extra. Because…
C. If you already have a GPS don't rent one. Don't use a smart phone because…
D. If you travel a lot buy a 100$ GPS don't rent one.
E. Take lot's of pictures when you pick up the car otherwise when you turn it in…
F. Do not let other people drive the rental car unless it's already cleared with the rental company. Don't take the risk because.
G. No smoking, not even with the window open, in the rental car because..
H. Keep the car clean during the trip and at the end clean it because…
I. Check the rental company is OK with travel out of the country.
J. Get gas before you drop it up even if it's three to five dollars, it's worth the extra five minutes. Some companies will allow you to drop it off empty but it's best to fill it because…
K. General tips for road trips:
L. Take food with you and have picnics at the different rest areas. you can even buy a fridge and a grill. You can save money on food but don't miss out on local cuisine. It's all about balance.
M. If you have an i phone app which helps you to find cheap gas then it's worth it. You can get gas up to 40 cents cheaper just down the road.
N. Get a good app on your phone for hotels because that will help you to save money by getting the best price on the hotel. But some apps are not good because they don't show the extra charges.



Can you now go on a road trip and hire a car in English?